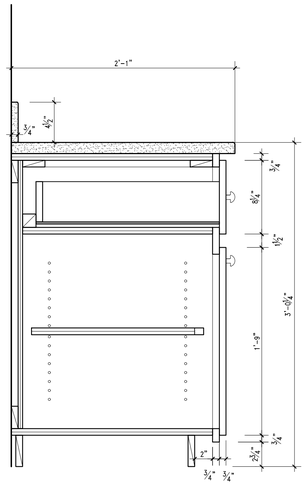

1 / A9.2 Base Cabinet Section
1 1/2" = 1'-0"

ROOM FINISHES

Rooms			FLOOR								BASE								WAINSCOT							Ht.	WALL								CEILING											Ht.
Location	Room No.	Room Name	Materials								Materials								Materials							Ht.	Materials								Materials								Mounting			Ht.
			Concrete	Exist. Wood	Ceramic Tile	LVT	Wood	Sealed	Painted		Wood	Ceramic Tile				Sealed	Painted		Wood	Ceramic Tile			Sealed	Painted			GWB							Painted	GWB	ACT						Painted	Direct	Furred	Suspended	
			1	2	3	4	5	6	7	8	1	2	3	4	5	6	7	8	1	2	3	4	5	6	7		1	2	3	4	5	6	7	8	1	2	3	4	5	6	7	8	D	F	S	
	101	Gathering Space		EW				S			W							P									GWB							P												
	102	Stair					W				W							P									GWB							P	GWB							P				
	103	Storage				L					W							P									GWB							P	GWB							P				
	104	ADA Toilet			CT							CT								CT						42"	GWB							P		ACT									S	
	201	Attic					W		P																		GWB								GWB									F		
	202	Stair					W		P																		GWB							P	GWB							P		F		
	203	Storage					W		P																		GWB								GWB									F		
		Ceramic tile floor	DalTile - Sleigh Creek - Wagon 6 x 36 Color SK33 1/8" gout joint																																												
		Ceramic tile base	DalTile - Sleigh Creek - Wagon 6 x 36 Color SK33 1/8" gout joint																																												
		Ceramic tile wainscot	DalTile - Outlander Dusk - Rectangle Pallazzo 12 x 24 1/8" grout joint																																												
		Acoustic ceiling tile	Certainteed Performa Fine Fissured Square Edge White HF-154 24 x 24 x 5/8"																																												
		ACT Grid	Rockfon Chicage Metallic 1200 Seismic 15/16"																																												
		LVT	Mannington Commercial - Citypark - Windsor Oak Ashen 5.8 x 37																																												

Island
Heritage Trust
420 Sunset Road
Deer Isle,
Maine

Stahnke +
Kitagawa Architects
20 Bakeman Road
Harborside, ME
207 326 8877

Finish Schedule
& Cabinets

SCALE:
AS NOTED

12-8-23

DRAWN BY | CHECKED BY

PROJECT NUMBER

DRAWING NUMBER

A9.2